P02 MACHZ
P03 NETWORK
P04 SDRAM
P05 FLASH
P06 IDE
P07 KBD, MOUSE, USB
P08 SERIAL & PARALLEL
P09 AUDIO
P10 VIDEO
P11 MODEM
P12 MODEM DAA
P13 SYSTEM CLOCKS
P14 POWER & FRONT PANEL

MachZ

P05 FLASH

VCC3V, VCC5V, GND
RESETX
MEMRX, MEMWX
SA[23..0], SD[15..0]
FLASHCSX0, FLASHCSX1
IRQ7, IRQ[3..5], IRQ[9..12]

P04 SDRAM

VCC3V, GND
DRD[31..0], DRA[13..0], DRDQM[3..0], DRCLK0, DRCLK1, DRCLK2, DRCLK3, DRCSX0, DRCSX1, DRCSX2, DRCSX3, DRRASX, DRCASX, DRWEX, DRCKE
MEMSCL, MEMSDA
SCL, SDA

P09 AUDIO

VCC5V, VCC3V, GND
MDM_AOUT, CLKBIT, SDATIN, SDATOUT, AUDSYNC, MUTE, PCBEEP, RESETX, CLK24.576MHZ

P10 VIDEO

VCC3V, GND
CLKVIDEO, CLK_PCISL3
PCI_INTAX, PCI_GNT0X, PCI_REQ0X
PAD[31..0]
PCI_CBEX0, PCI_CBEX1, PCI_CBEX2, PCI_CBEX3, PCI_FRAMEX, PCI_IRDYX
PCI_DEVSELX
PCI_PAR, PCI_RSTX, PCI_TRDYX, PCI_STOPX

P13 SYSTEM CLOCKS

VCC3V, GND
CLK24.576MHZ, CLKVIDEO, CLKPCISL3, CLK14.3MHZM, CLKUSB, CLKCPUSYS, CLKCPUPCI, CLKPCISL2, CLK25MHZ, CLK14.75MHZ

P03 NETWORK

VCC5V, VCC3V, GND
PCI_CLKSL2, CLK25MHZ
PAD[31..0]
PCI_CBEX0, PCI_CBEX1, PCI_CBEX2, PCI_CBEX3, PCI_FRAMEX, PCI_IRDYX, PCI_PERRX, PCI_SERRX, PCI_INTBX, PCI_GNT1X, PCI_REQ1X
PCI_DEVSELX, PCI_LOCKX, PCI_PAR, PCI_RSTX, PCI_TRDYX, PCI_STOPX

P02 MACHZ

VDD_CORE, VCC3V, GND
RESETX, PWROFF_ENX, SHD_DIS, PCBEEP
MEMRX, MEMWX
SA[23..0], SD[15..0]
FLASHCSX0, FLASHCSX1
IRQ7, IRQ[3..5], IRQ[9..12]
DRD[31..0], DRA[13..0], DRDQM[3..0], DRCLK0, DRCLK1, DRCLK2, DRCLK3, DRCSX0, DRCSX1, DRCSX2, DRCSX3, DRRASX, DRCASX, DRWEX, DRCKE
SCL, SDA
PCI_INTAX, PCI_GNT0X, PCI_REQ0X
PAD[31..0]
PCI_CBEX0, PCI_CBEX1, PCI_CBEX2, PCI_CBEX3, PCI_FRAMEX, PCI_IRDYX, PCI_PERRX, PCI_SERRX, PCI_INTBX, PCI_GNT1X, PCI_REQ1X
PCI_DEVSELX, PCI_LOCKX, PCI_PAR, PCI_RSTX, PCI_TRDYX, PCI_STOPX
CLK14.3MHZM, CLKUSB, CLKCPUSYS, CLKCPUPCI

P14 POWER

VCC5V, VCC_DSPC, VCC3V, VDD_CORE, GND
RESETX, PWROFF_ENX, SHD_DIS, PCBEEP, ZRSTX

P07 KBD, MOUSE, FDD, USB

VCC5V, VCC3V, GND
ZRSTX, SA23
FDD_INDX, FDD_WDATAX, FDD_RDATAX, FDD_WPX, FDD_TRKX0, FDD_DSKCHGX, FDD_STEPX, FDD_DIRX, FDD_MTRX0, FDD_DRX0, FDD_WGATEX, FDD_HDSELX
KBCLKRX, KBDATRX, MCLKRX, MDATRX
USBPWREN, USBDR1M, USBDR1P, USBDR2M, USBDR2P, USBOVRCUR1, USBOVRCUR2

P06 IDE

SHD_DIS
VCC5V, VCC3V, GND
IDE_D[15..0], IOCHRDY, IDE_ADDR0, IDE_ADDR1, IDE_ADDR2, IDE_CSX0, IDE_CSX1, IDE_DACKX, IDE_IOWX, IDE_IORX, IDE_IORDY, IDE_DREQ, IDE_RSTX, IRQ14, IRQ15, IDES_DREQ, IDES_IOWX, IDES_IORX, IDES_DACKX, IDES_IORDY

P11 MODEM

RESETDRV
VCC_DSPC, VCC3V, GND
SRXD2, STXD2, SRTS2X, SCTS2X, SDTR2X, SDSR2X, SDCD2X, SRI2X, MDM_RxD, MDM_TxD, MDM_RTS, MDM_CTS, MDM_DTR, MDM_DSR, MDM_DCD, MDM_RI
CLK14.75MHZ, RESETX
MDM_AOUT, MDM_SPK
DSP_SDI, DSP_SCLK, DSP_SDO, DSP_FSYNCX, OFFHOOKX

P12 MODEM DAA

MDM_AOUT, MDM_SPK
VCC3V, GND
DSP_SDI, DSP_SCLK, DSP_SDO, DSP_FSYNCX, OFFHOOKX
CLK14.75MHZ, RESETX

P08 SERIAL & PARALLEL PORTS

VCC5V, GND
SRXD1, STXD1, SRTS1X, SCTS1X, SDTR1X, SDSR1X, SDCD1X, SRI1X
PP_D[7..0], PP_STBX, PP_ACKX, PP_ERRX, PP_PE, PP_SLINX, PP_SLCT, PP_AFDX, PP_INITX, PP_BUSY
IR_RXD, IR_TXD, SER_SW

BD1
PCBOARD

CONFIDENTIAL INFORMATION
Reproduction is strictly forbidden without written permission of the company

ZF Embedded, Inc.
1052 Elwell Court
Palo Alto, CA, 94303
(650) 965-3800

APPROVALS	Date
Drawn B.Mask/ A.Kuusik	
Checked K.Kevvai	
Designed by Artec Design Group	

Title: INTERNET APPLIANCE (II)

Size	Document nr	ZF nr	Rev
C	170103-02	9400-0048-03-X4	3.2

Date: Thursday, November 09, 2000 Sheet 1 of 15

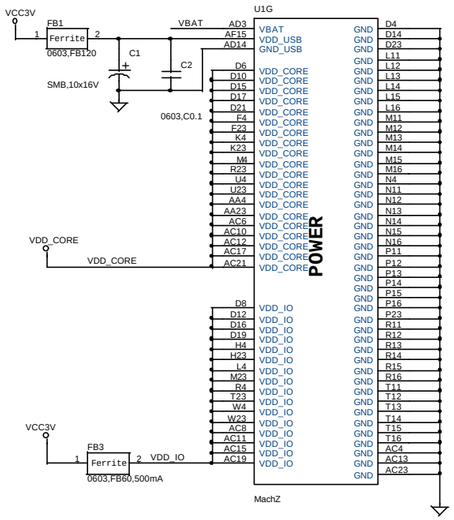

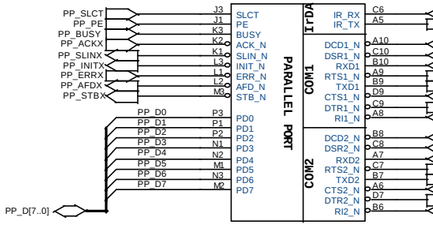

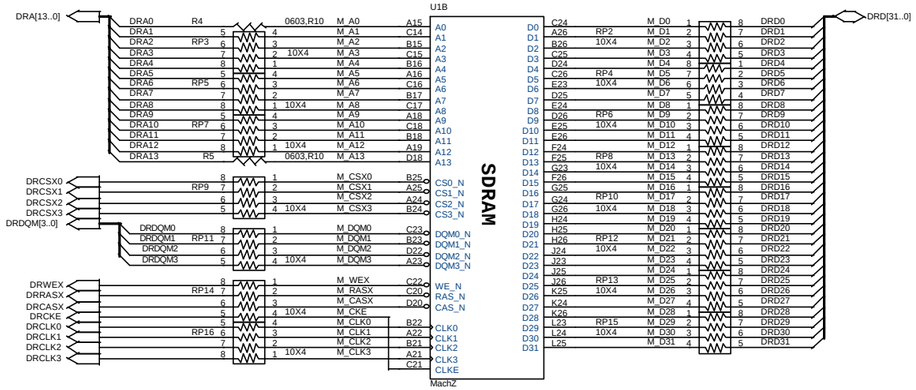

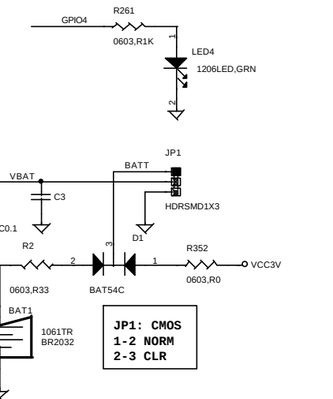

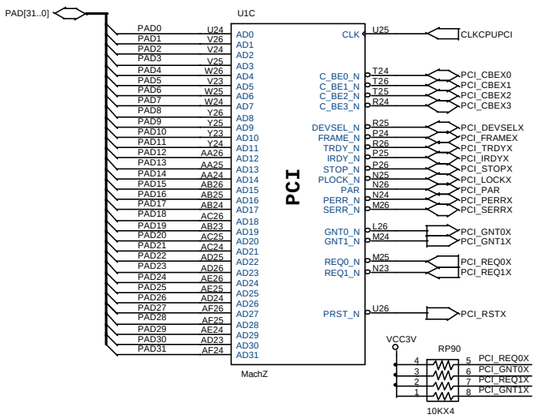

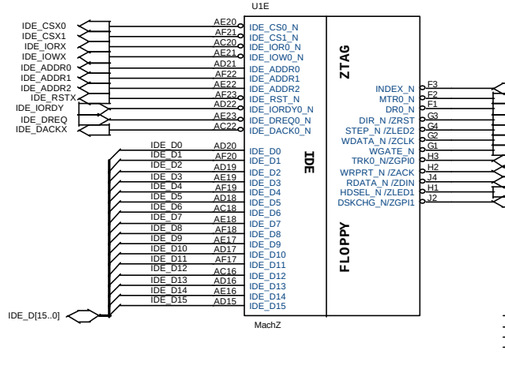

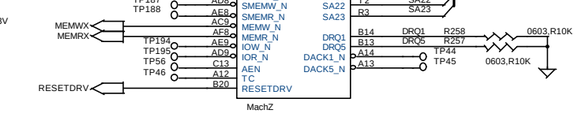

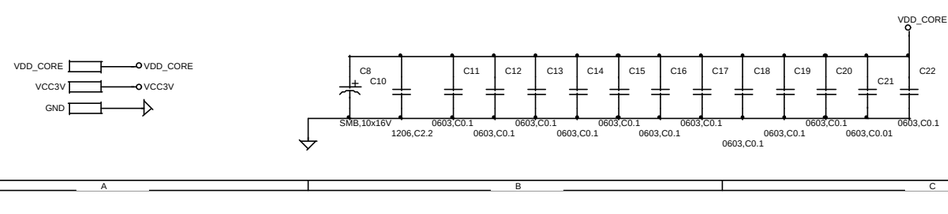

ZF Embedded, Inc.			1052 Elwell Court Palo Alto, CA, 94303 (650) 965-3800
Title: MACHZ			
Size: C	Document nr: 170103-02	ZF nr: 9400-0048-03-X4	Rev: 3.2
Date: Thursday, November 09, 2000		Sheet 2 of 15	

DP83815

10/100 Mb/s
Ethernet Controller

all +3.3V

PCI_CLKSL2
PAD[31..0]
PCICLK
PCI
BIDIR
IN
OUT
PADIO

TX/TL
TPTDP
TPTDM
TXD+
TXD-
TPRDP
TPRDM
RXIN+
RXIN-

MCSn
MRDn
MWRn
LEDACTn/MA0
LED10LNKn/MA1
LED100LNKn/MA2
EESEL
EEDI/MA3
EECLK/MA4
EEDO/MD4
MA5
LEDACTX
EECS
EEDI/BRMA3
EESK/BRMA4
EEDO/BRMD4
EEPROM
NW ACT
LED3
0805LED,RED-NL
R8
0603,R510
U4
NM93C46ALM8
SO8
C33
0603,C0.1

BIOS ROM
RXCLK
RXD0/MA6
RXD1/MA7
RXD2/MA8
RXD3/MA9
RXER/MA10
RXDV/MA11
RXOE
TXCLK
TXD0/MA12
TXD1/MA13
TXD2/MA14
TXD3/MA15
TXEN
COL
CRS
MDC
MDIO
BRMD1
MD0
MD1
MD2
MD3
MD5
MD6
MD7
R14
0603,R1K,NL

NC
RSV1
RSV2
RSV3

PCIVDD
PHYVDD
MACVDD
FSVDD
IOVDD
TXDVDD
RXAVDD
BCAP1
BCAP2
BCAP3
VREF
0603,C0.1
R17
0603,R9.31K,1%
C39
C40
C41

PCIVSS
PHYVSS
MACVSS
FSVSS
IOVSS
TXDVSS
RXAVSS
TXIOVSS
SUBGND
R24
0603,R0

U3
DP83815
PQFP-144

PCI_CBEX0
PCI_CBEX1
PCI_CBEX2
PCI_CBEX3
CBEn0
CBEn1
CBEn2
CBEn3

PCI_DEVSELX
PCI_FRAMEX
PCI_TRDYX
PCI_IRDYX
PCI_STOPX
PCI_PAR
PCI_PERRX
PCI_SERRX
DEVSELn
FRAMEn
TRDYn
IRDYn
STOPn
PAR
PERRn
SERRn

PCI_INTBX
PCI_REQ1X
INTAn
REQn

PCI_GNT1X
PAD22
R15
0603,R33
GNTn
IDSEL
PCI_RSTX
RSTn

VDD
TP153
3VAUX
PWRGOOD
PMEn/CLKRUNn

CLK25MHZ
R341
R16
0603,R1M
0603,R0-NL
Y2
MA406,25.000M-C
C44
0603,C15p
C45
0603,C15p
X1
X2
25 MHZ

VCC5V
D2
SOT23-A,BAT54S
D3
SOT23-A,BAT54S
D4
SOT23-A,BAT54S
D5
SOT23-A,BAT54S
RXAVDD
R23
0603,49.9,1%
R22
0603,49.9,1%
TXD-
RXIN+
RXIN-
TXD+
C42
0603,C10p-NL
R18
0603,R0
R19
0603,R0-NL
R12
0603,49.9,1%
R13
0603,49.9,1%
C34
0603,C0.1
C37
0603,C0.1,NL
C38
0603,C0.1,NL
J1
TX+
TX-
CTT
RX+
RX-
CTR
SH1
SH2
RJ45 + Magn
LU1S515
10/100BASE-T
0603,C0.1
C35
C36
Place on either
side of RJ45

VCC3V
RP91
10KX4
RP92
10KX4
PCI_DEVSELX
PCI_FRAMEX
PCI_TRDYX
PCI_IRDYX
PCI_STOPX
PCI_LOCKX
PCI_PERRX
PCI_SERRX
PCI_LOCKX
R317
0603,R10K
PCI_PAR

FSVDD
FB5
VDD
0603,FB120
C49
1206,C2.2
C50
0603,C0.1
FSVSS

RXAVDD
FB4
VDD
0603,FB120
C47
1206,C2.2
C48
0603,C0.1

VDD
VCC3V
GND
C51
1206,C2.2
C52
1206,C2.2
C53
C54
C55
C56
C57
C58
C59
C60
C61
C62
0603,C0.1
Close to PHYVDD
Close to MACVDD
Close to IOVDD
Close to PCIVDD
Close to TXDVDD

ZF MicroSystems, Inc.		1052 Elwell Court Palo Alto, CA, 94303 (650) 965-3800	
Title: 10/100 NETWORK DP83815			
Size: C	Document nr: 170103-02	ZF nr: 9400-0048-03-X4	Rev: 3.2
Date: Thursday, November 09, 2000		Sheet 3 of 15	

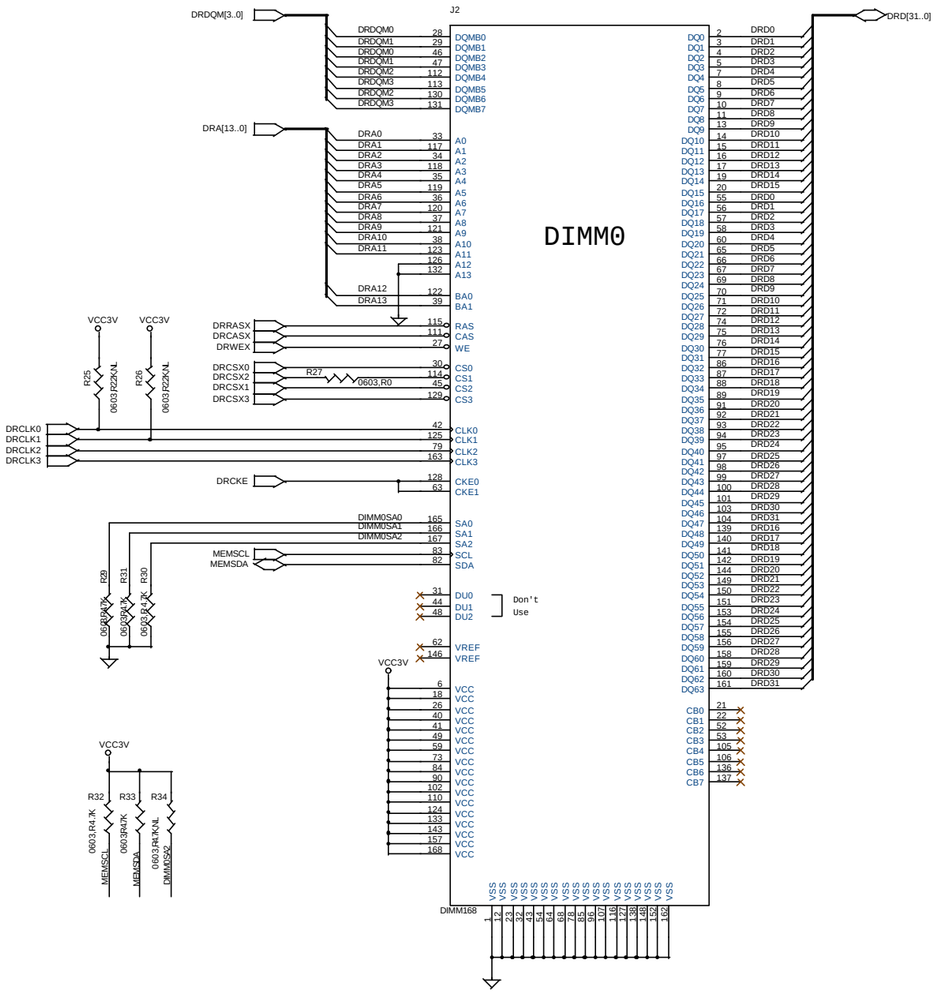

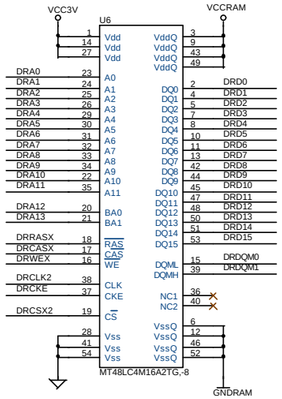

P:3,4,9,10,11,12,13,14 VCC3V VCC3V

P:2,3,4,6,7,8,9,10,11,12,13,14 GND

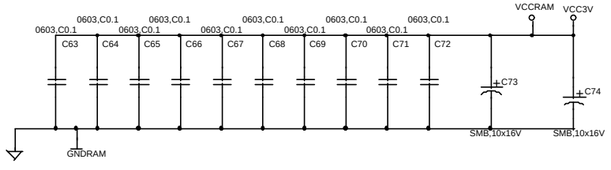

ZF Embedded, Inc.			1052 Elwell Court Palo Alto, CA, 94303 (650) 965-3800
Title: SDRAM - DIMM			
Size: C	Document nr: 170103-02	ZF nr: 9400-0048-03-X4	Rev: 3.2
Date: Thursday, November 09, 2000		Sheet 4 of 15	

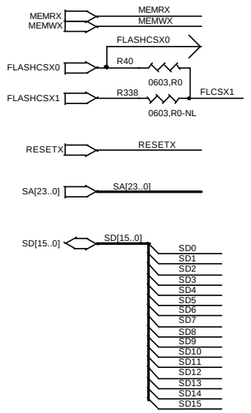

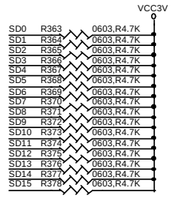

FLASH0/TOP SIDE

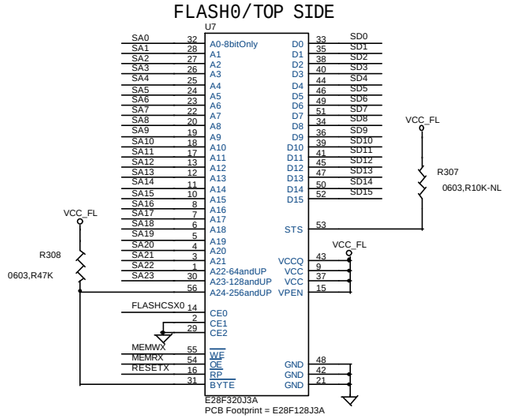

R265-R278 BOOTSTRAP OPTIONS

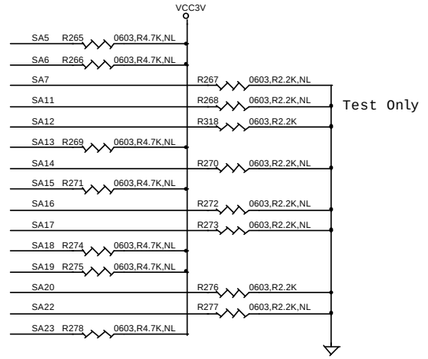

MACHZ DEFAULT BOOTSTRAP VALUES -
WITHOUT PULL-UPS/PULL-DOWNS

reset regs	value	description
23: BUR enable	1'b0	(BUR Disabled)
22: zfl enable	1'b1	(ZF Logic Enabled)
21: usb test mode enable	1'b0	(No USB Test)
20: back (ext) pci clock source	1'b1	(Use internal source)
19: back pci clk div	1'b0	(Divide sysclk_c by one)
18: front (ins) pci clk div	1'b0	(Divide sysclk_c by one)
17:16 l486 clk mode	2'b11	(3x sysclk_c)
15:13 l486 clk delay	3'b010	(factory default)
12: boot rom width 8/16	1'b1	(8 bit external ISA ROM)
11: int/ext bur	1'b1	(Use internal BUR when Ztag enabled)
10: SIO test mode	1'b0	(Test mode disabled)
09: Third PCI req/grt enable	1'b0	(Third PCI req/gnt disabled)
08: 486 raw clock disabled	1'b1	(486 raw clock disabled)
07: 486 DLL enabled	1'b1	(486 DLL clock enabled)
06: Derive 32KHz from 48MHz	1'b0	(Using ext 32KHz Crystal)
05: Derive 14MHz from 48MHz	1'b0	(Using ext 14MHz Crystal)
04:0	1'b0	(User defined)

CPU Speed	SA16	SA17
1X	L	L
2X	H	L
3X (default)	H	H
4X	L	H

FLASH1/BOTTOM SIDE

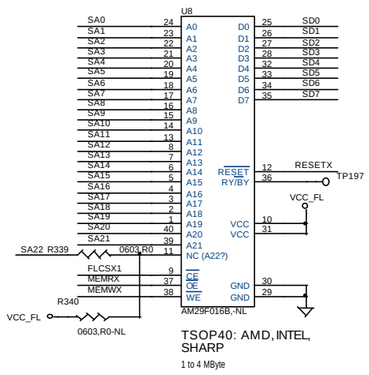

TSOP40: AMD, INTEL, SHARP

1 to 4 MByte

256K X 8 BIOS EPROM/TOP SIDE (FLASH0 AREA)

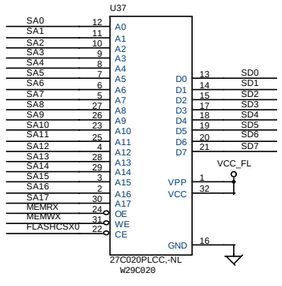

OPTIONAL PARTS

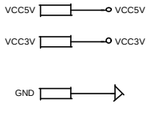

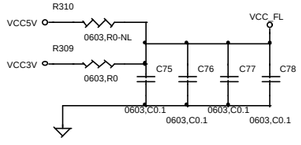

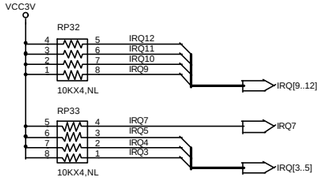

ZF Embedded, Inc.		1052 Elwell Court Palo Alto, CA, 94303 (650) 965-3800	
Title: FLASH			
Size: C	Document nr: 170103-02	ZF nr: 9400-0048-03-X4	Rev: 3.2
Date: Thursday, November 09, 2000		Sheet 5 of 15	

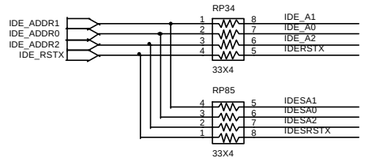

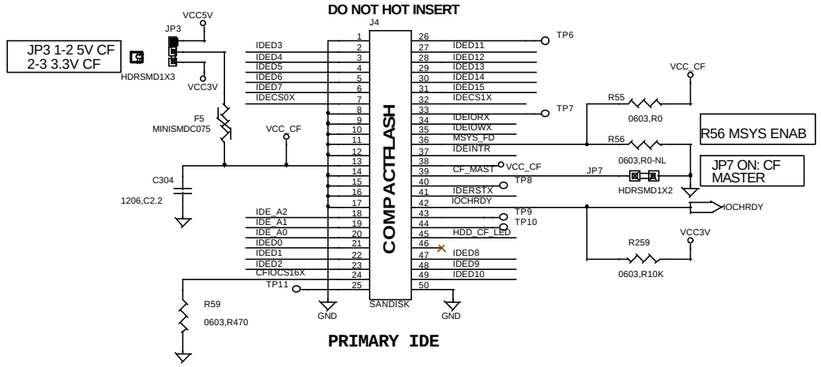

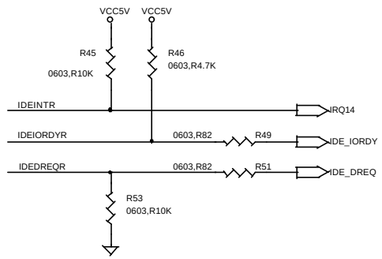

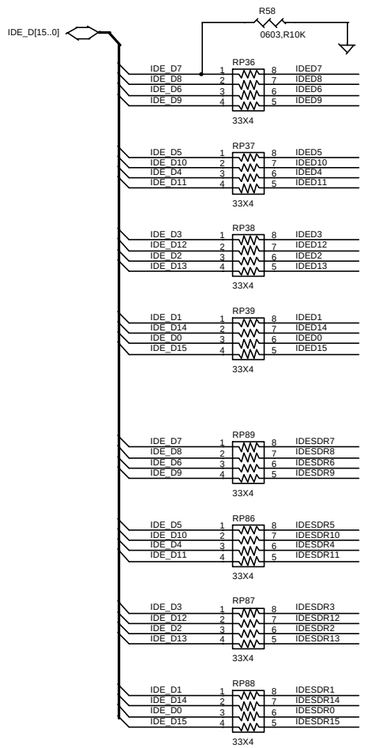

R58 is required per the IDE spec. IDEDR7 is sampled during drive detection routines, and if this signal floats high, detection software thinks a drive is connected and busy.

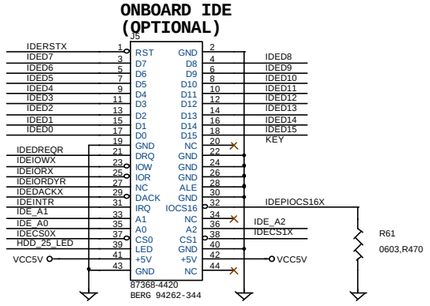

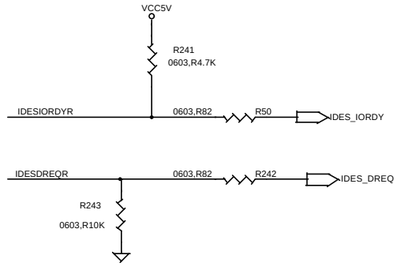

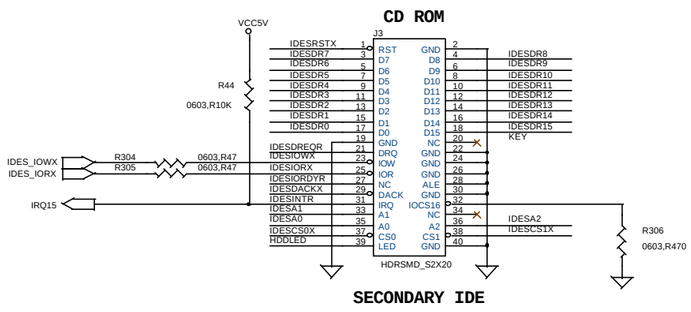

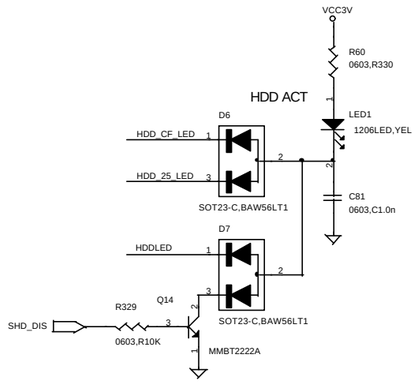

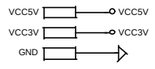

M7 M8 M9 M10 M11 M12 M13 M14
MTHOLE5 MTHOLE5 MTHOLE5 MTHOLE5 MTHOLE5 MTHOLE5 MTHOLE5 MTHOLE5

ZF Embedded, Inc.	1052 Elwell Court Palo Alto, CA, 94303 (650) 965-3800	
Title: IDE		
Size: C	Document nr: 170103-02	ZF nr: 9400-0048-03-X4
Rev: 3.2		
Date: Thursday, November 09, 2000	Sheet 6 of 15	

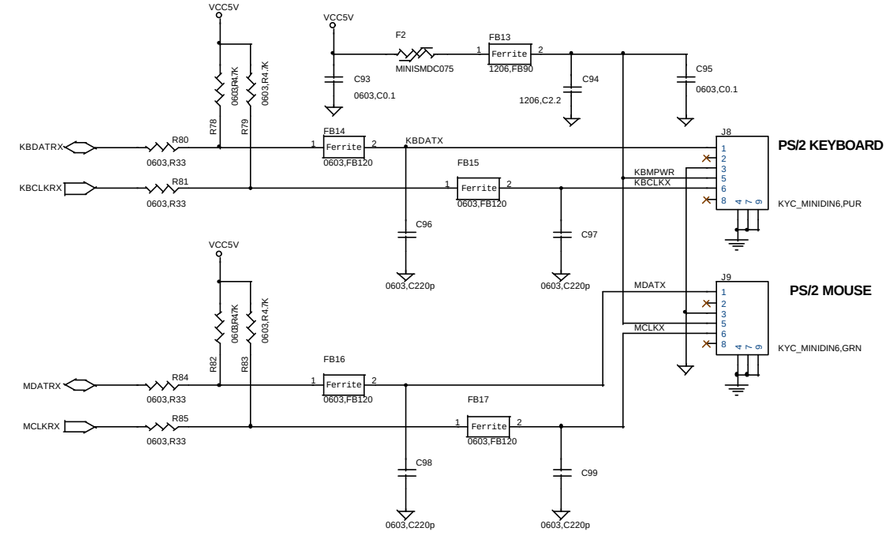

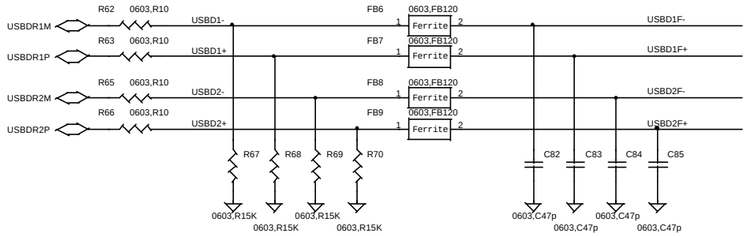

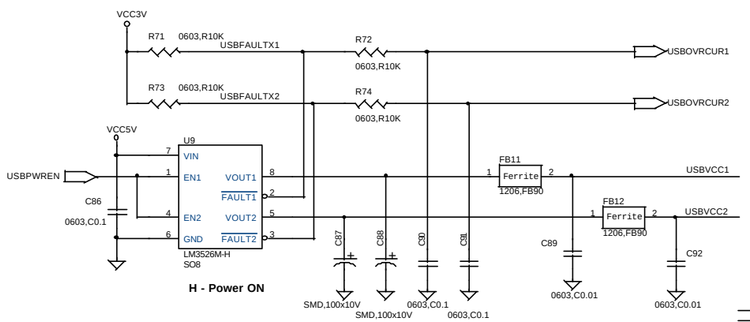

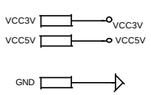

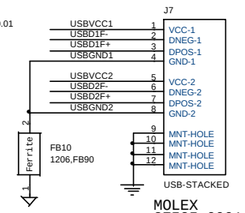

USB
PORT 1 - BOTTOM
PORT 2 - TOP

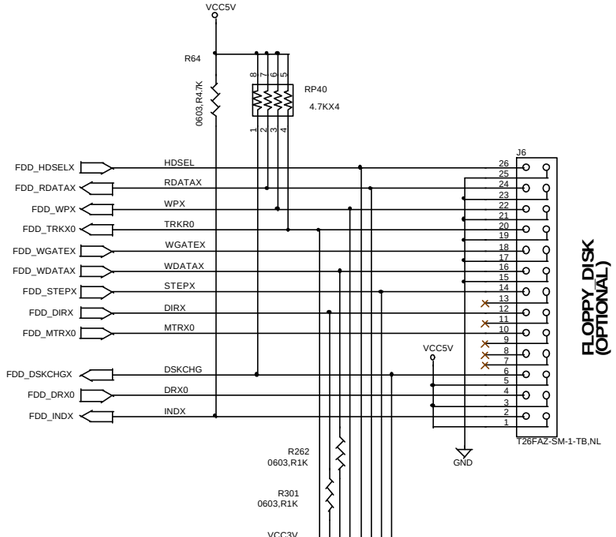

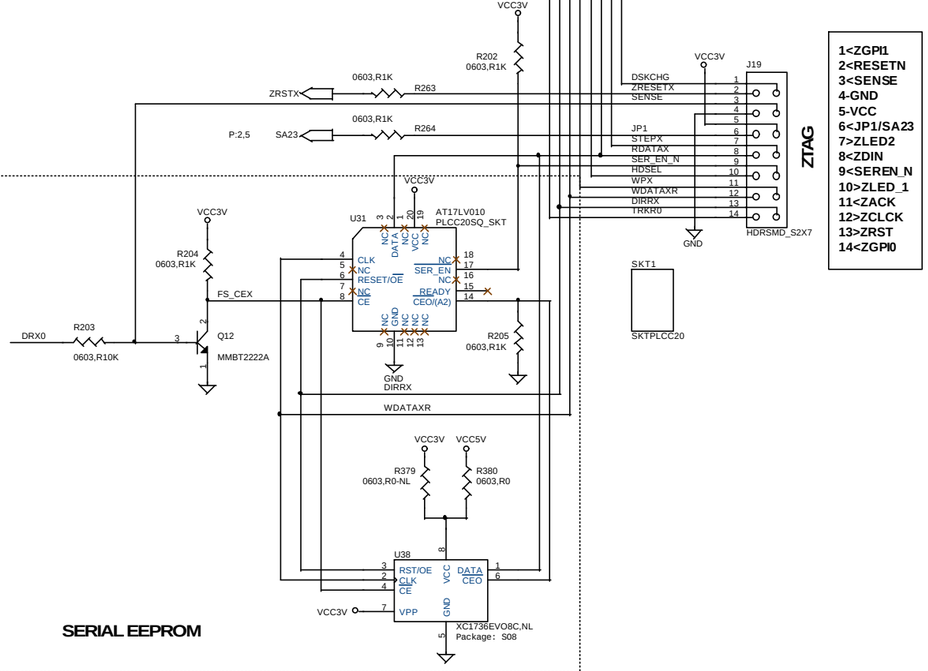

ZF Embedded, Inc.
1052 Elwell Court
Palo Alto, CA, 94303
(650) 965-3800

Title: KBD, MOUSE, FDD, USB, ZTAG

Size	Document nr	ZF nr	Rev
C	170103-02	9400-0048-03-X4	3.2

Date: Thursday, November 09, 2000 Sheet 7 of 15

RS-232 Transceivers

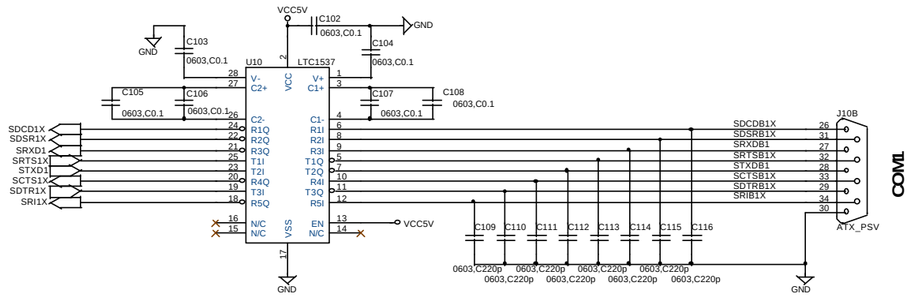

COM1

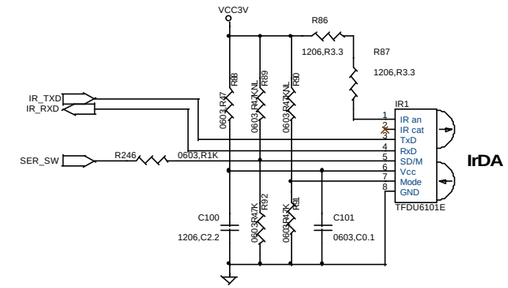

IrDA

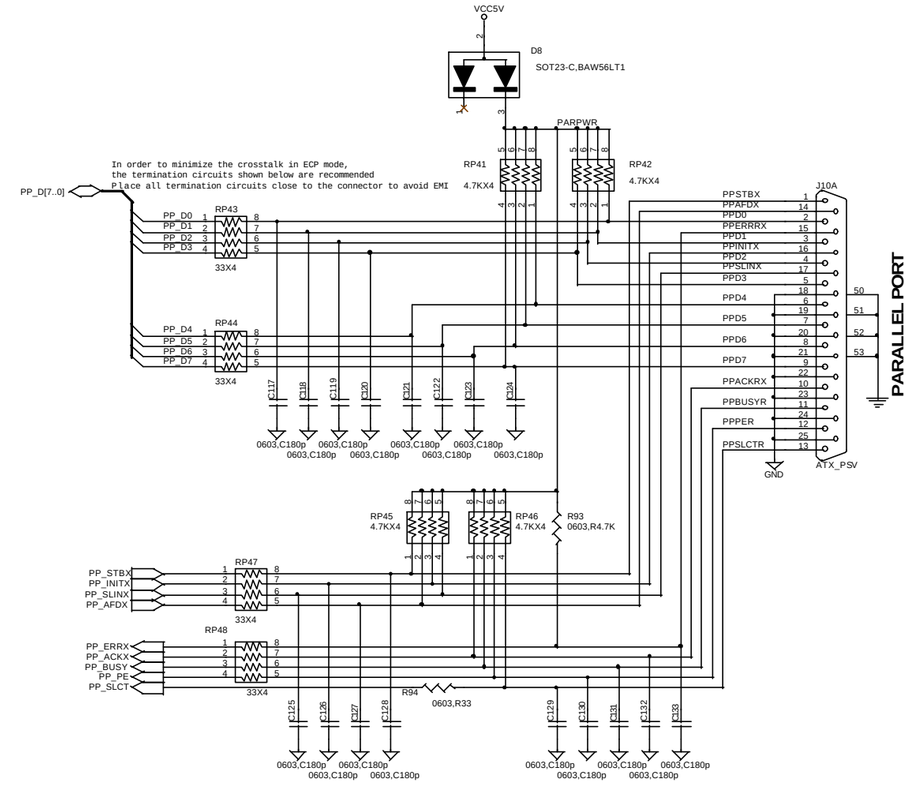

VCC5V — VCC5V

GND

ZF Embedded, Inc.		1052 Elwell Court Palo Alto, CA, 94303 (650) 965-3800	
Title: SERIAL & PARALLEL PORTS, IrDA			
Size: C	Document nr: 170103-02	ZF nr: 9400-0048-03-X4	Rev: 3.2
Date: Thursday, November 09, 2000		Sheet 8 of 15	

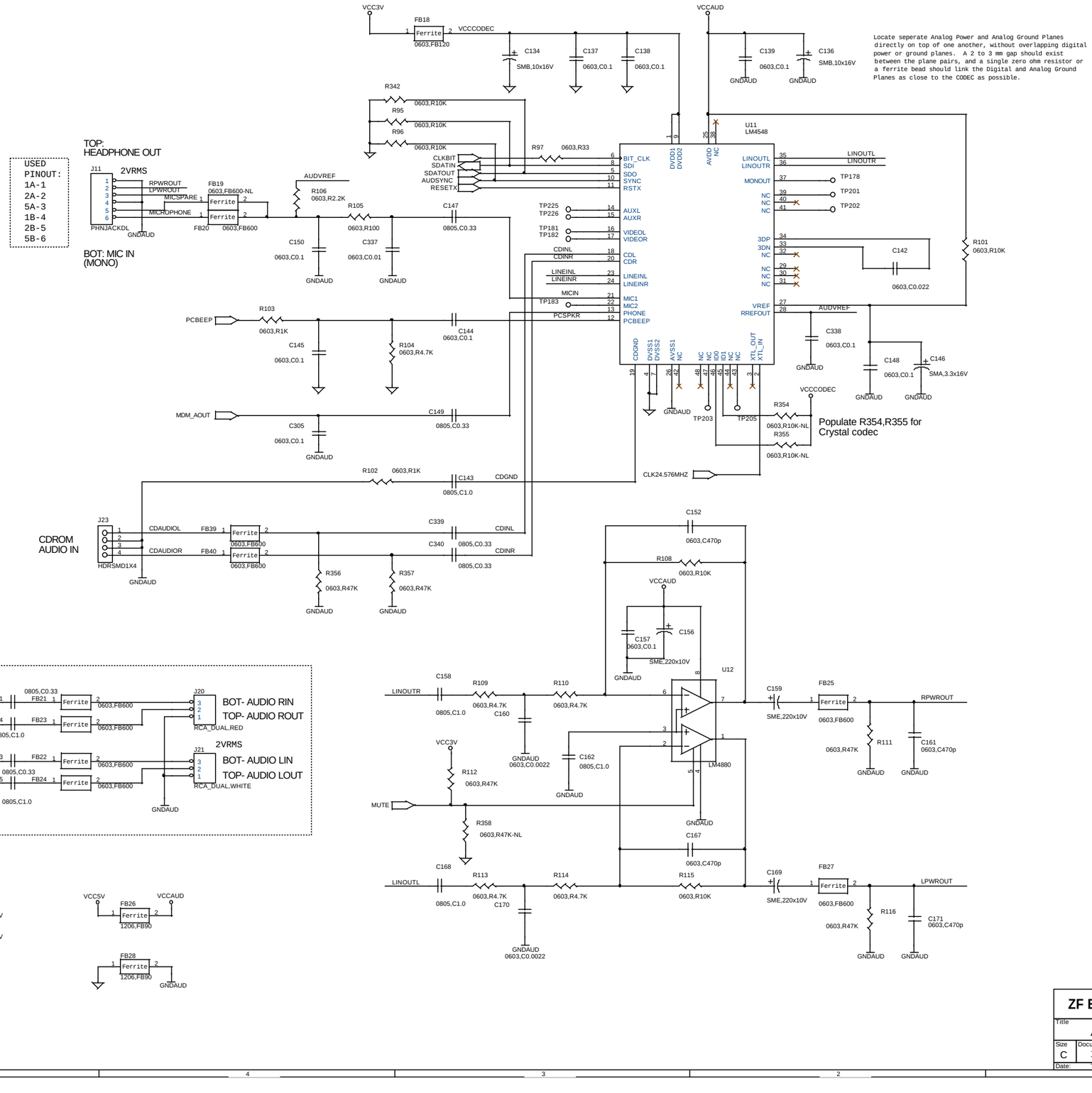

ZF Embedded, Inc.		1052 Elwell Court Palo Alto, CA, 94303 (650) 965-3800	
Title: AUDIO			
Size: C	Document nr: 170103-02	ZF nr: 9400-0048-03-X4	Rev: 3.2
Date: Thursday, November 09, 2000		Sheet 9 of 15	

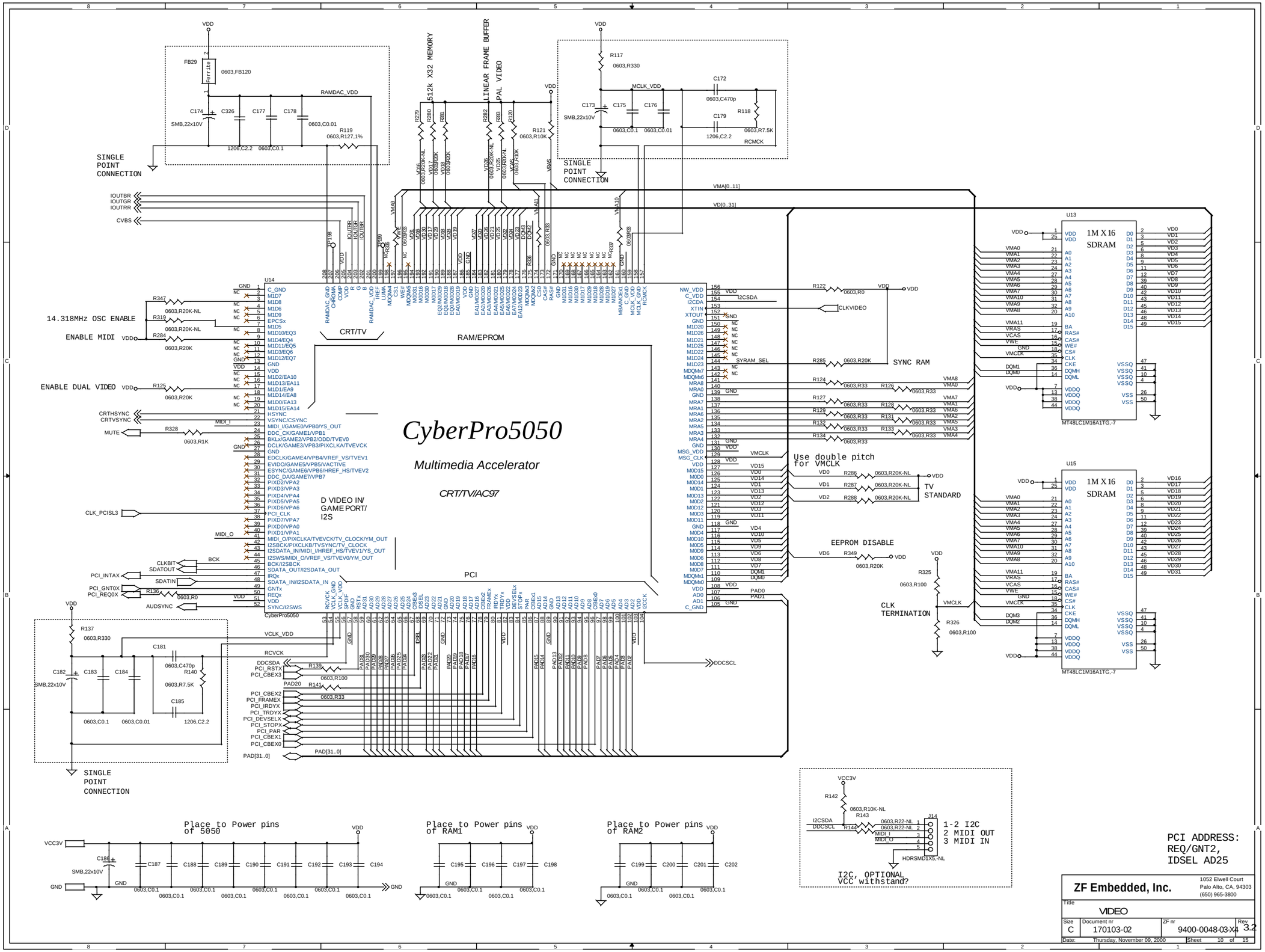

PCI ADDRESS:
REQ/GNT2,
IDSEL AD25

ZF Embedded, Inc.	1052 Elwell Court Palo Alto, CA, 94303 (650) 965-3800		
Title	VIDEO		
Size C	Document nr 170103-02	ZF nr 9400-0048-03-X4	Rev 3.2
Date: Thursday, November 09, 2000		Sheet 10 of 15	

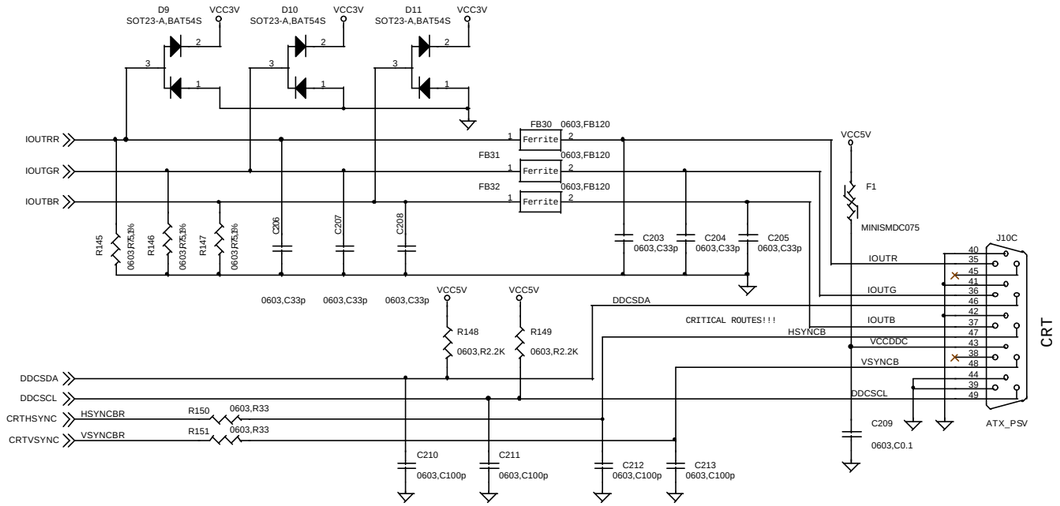

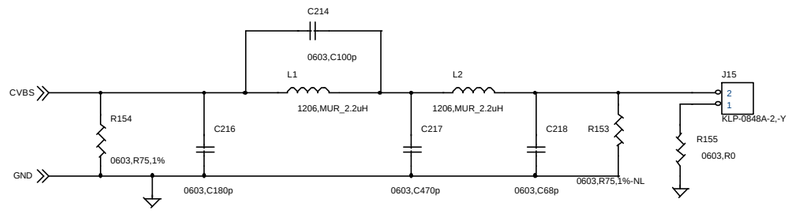

ZF Embedded, Inc.			1052 Elwell Court Palo Alto, CA, 94303 (650) 965-3800
Title	VIDEO CONNECTORS		
Size C	Document nr 170103-02	ZF nr 9400-0048-03-X4	Rev 3.2
Date: Thursday, November 09, 2000		Sheet 11 of 15	

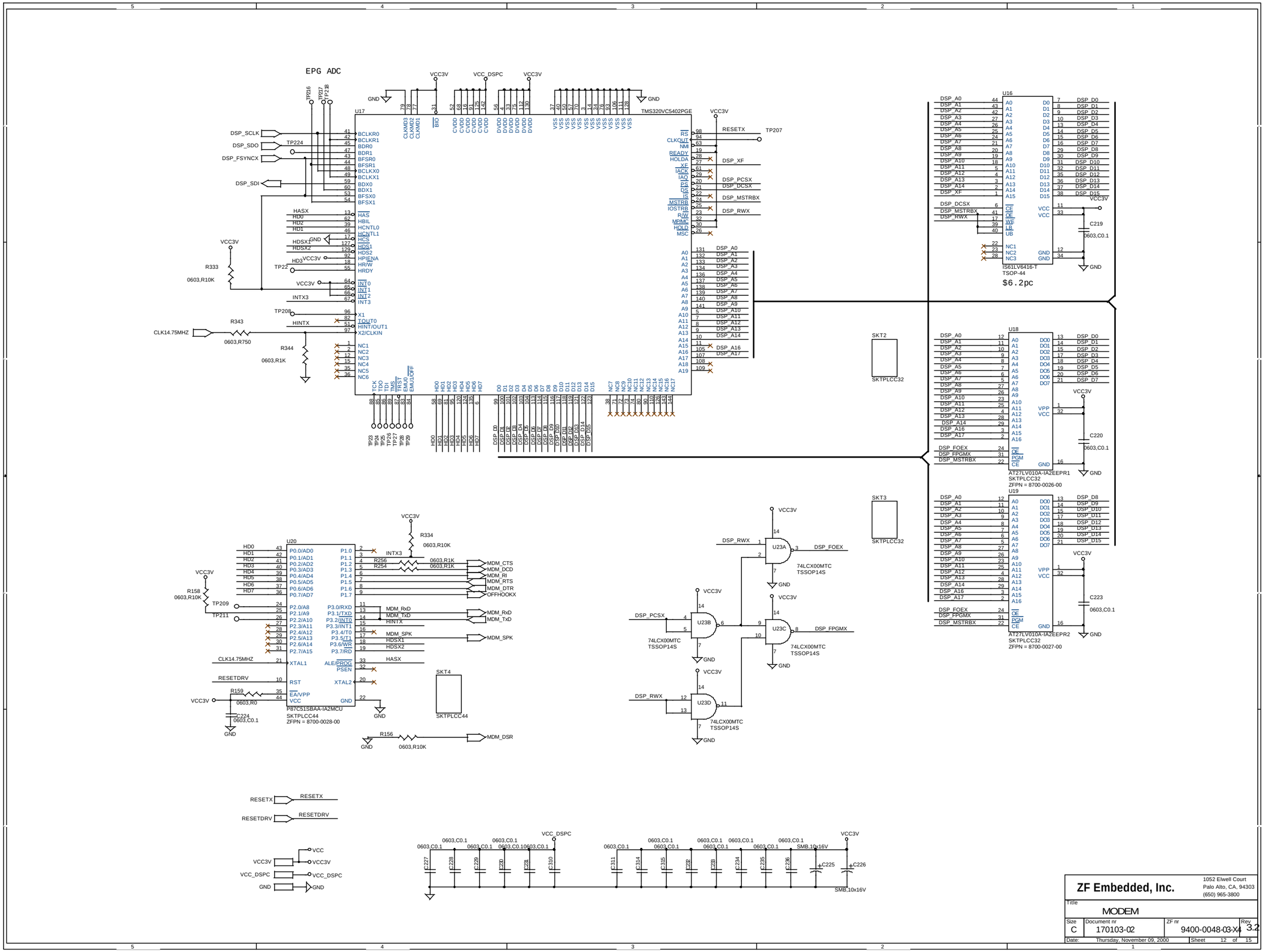

ZF Embedded, Inc.	1052 Elwell Court Palo Alto, CA, 94303 (650) 965-3800		
Title	MODEM		
Size C	Document nr 170103-02	ZF nr 9400-0048-03-X4	Rev 3.2
Date: Thursday, November 09, 2000		Sheet 12 of 15	

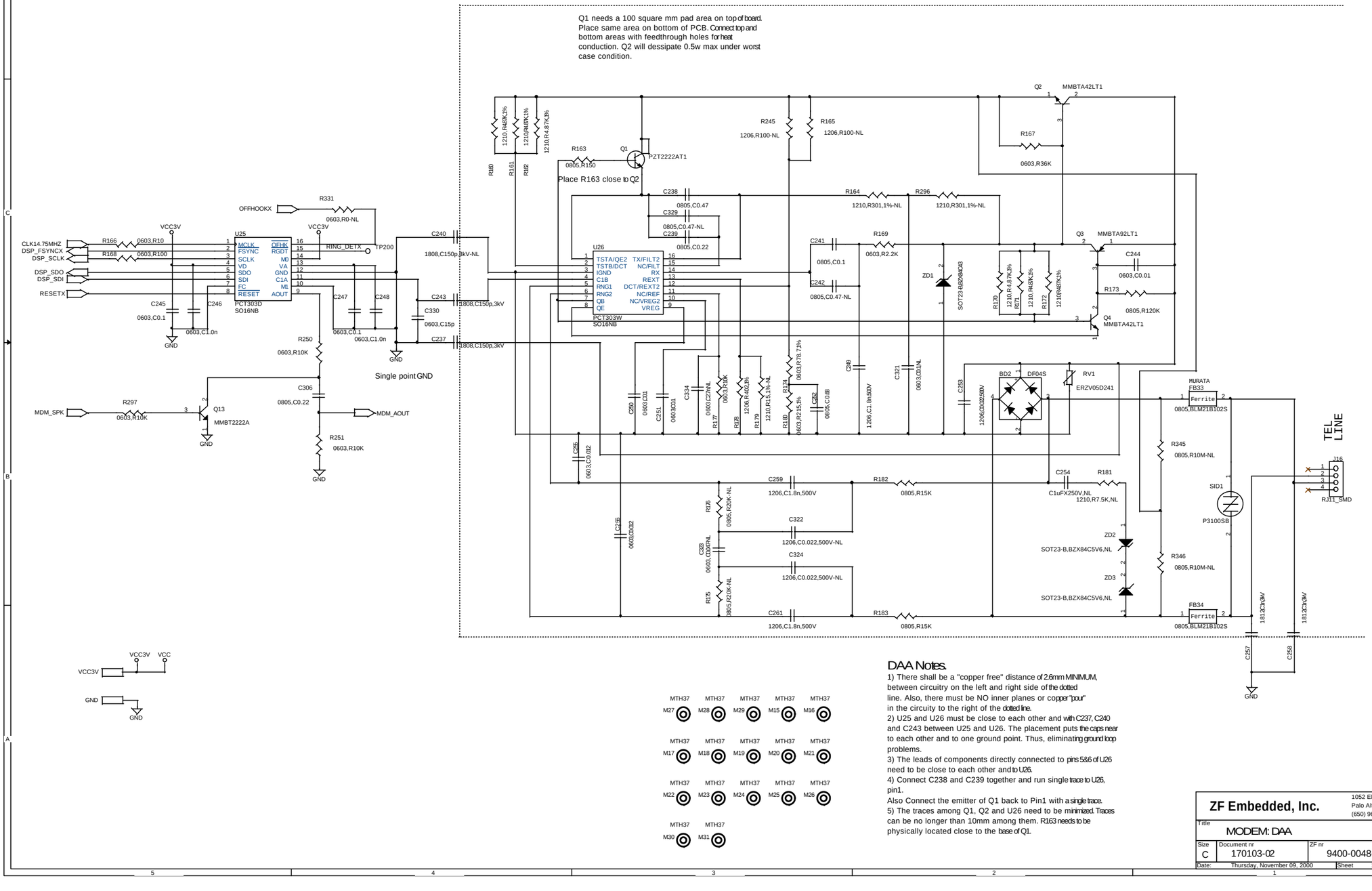

DAA Notes.

1) There shall be a "copper free" distance of 2.6mm MINIMUM, between circuitry on the left and right side of the dotted line. Also, there must be NO inner planes or copper "pour" in the circuity to the right of the dotted line.
2) U25 and U26 must be close to each other and with C237, C240 and C243 between U25 and U26. The placement puts the caps near to each other and to one ground point. Thus, eliminating ground loop problems.
3) The leads of components directly connected to pins 5&6 of U26 need to be close to each other and to U26.
4) Connect C238 and C239 together and run single trace to U26, pin1.
Also Connect the emitter of Q1 back to Pin1 with a single trace.
5) The traces among Q1, Q2 and U26 need to be minimized. Traces can be no longer than 10mm among them. R163 needs to be physically located close to the base of Q1.

ZF Embedded, Inc.		1052 Elwell Court Palo Alto, CA, 94303 (650) 965-3800	
Title: MODEM: DAA			
Size: C	Document nr: 170103-02	ZF nr: 9400-0048-03-X4	Rev: 3.2
Date: Thursday, November 09, 2000		Sheet 13 of 15	

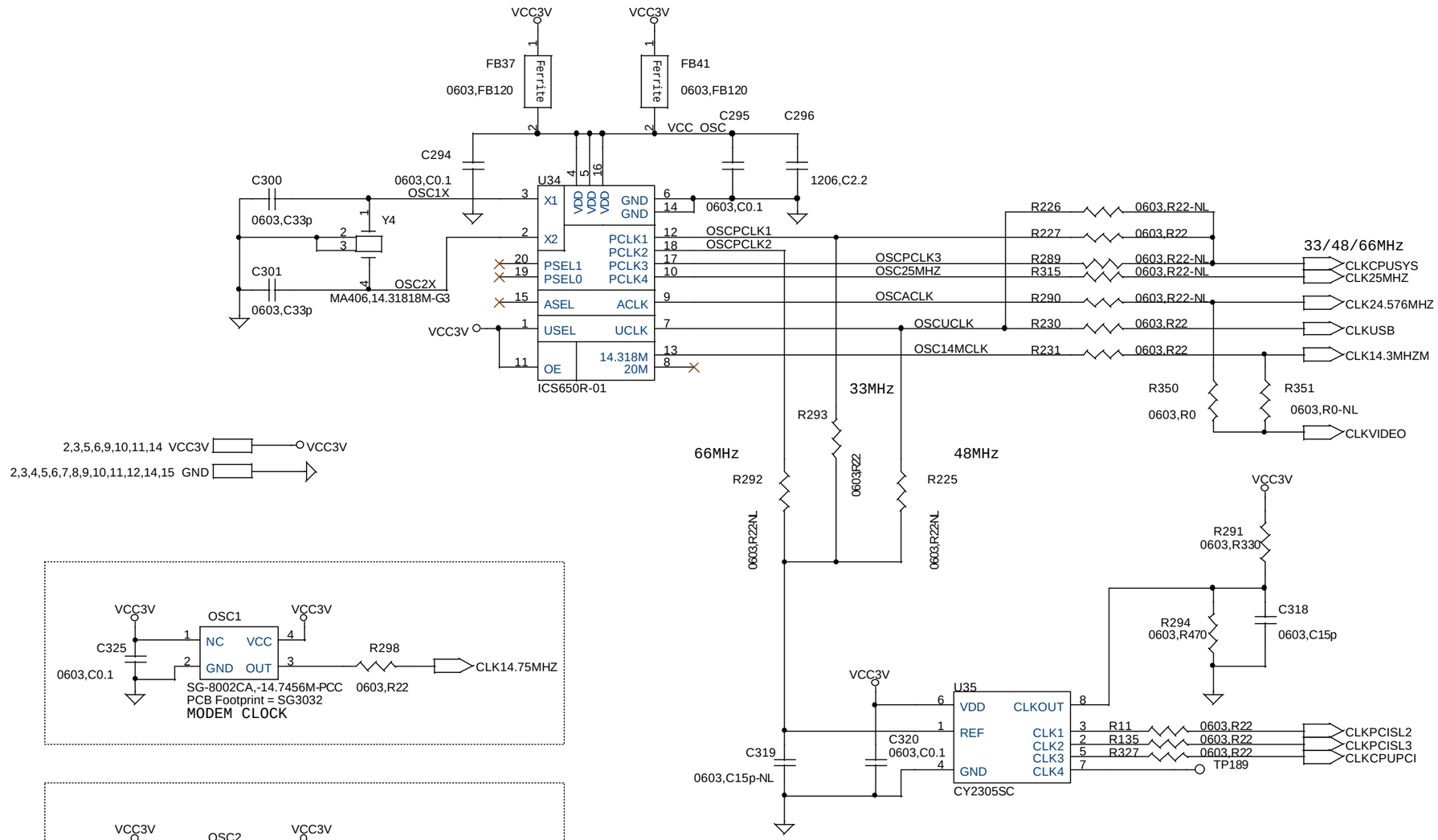

ZF Embedded, Inc.	1052 Elwell Court Palo Alto, CA, 94303 (650) 965-3800
Title	SYSTEM CLOCKS
Size: B	Document nr: 170103-02
ZF nr: 9400-0048-03-X4	Rev: 3.2
Date: Thursday, November 09, 2000	Sheet 14 of 15

POWER IN
12-15V 3A C+

Install
R216 OR
U36

+5V 3A MAX

+3.3V 3A MAX

NO SKIP MODE

PLACE ON END OF BOARD
CLOSEST TO PSU
CONNECTOR

DO NOT POPULATE
U32 AND THE
REST IF POWER
SW NOT USED

CPU CORE NORM +2.5V,
0.5A MAX

MODEM DSP CORE
+1.8V, 0.5A
MAX

PC SPEAKER

POWER
ON/RESET

OMRON,
or Bourns
7906S-1-000

R220:
power sw
R360:
RESET

POWER ON

SPARE GATE

** USE LP3470xxx-2.93 FOR +/- 10% VCC3V
** USE LP3470xxx-3.08 FOR +/- 5% VCC3V
*** The TRP in milliseconds is 2000 times this capacitor value in microfarads (e.g., apply 0.1uf for 200 ms).

ZF Embedded, Inc.		1052 Elwell Court Palo Alto, CA, 94303 (650) 965-3800	
Title: POWER, RESET, FRONT PANEL			
Size: C	Document nr: 170103-02	ZF nr: 9400-0048-03-X4	Rev: 3.2
Date: Thursday, November 09, 2000		Sheet 15 of 15	